# GPS/INS Flight Testing in a High Dynamic Aircraft

***For the Quarterly Review of the NASA/FAA Joint University Program for Air Transportation Research***
***Friday, October 24th 2003***

Sarah Thomas,
Curtis Cutright, Michael S. Braasch

Avionics Engineering Center
Ohio University, Athens

**Project Sponsor: NASA/FAA Joint University Program**

# Overview

- Delfin L-29
- Recent Testing
- Projected Modifications to Current System

# L-29 Delfin

Capabilities:

- High Altitude 11 Km
- High Speed 354 knots
- Fully Aerobatic

Flight Specs Taken From http://aeroweb.brooklyn.cuny.edu/specs/aero/l-29.htm

# Flight Conducted

- September 24, 2003
  - Record of the L-29 while Operating within its Dynamic Envelope
  - GPS Data Collected
  - Illustrate Capabilities of the Aircraft and Data Collection Equipment

# Flight Path

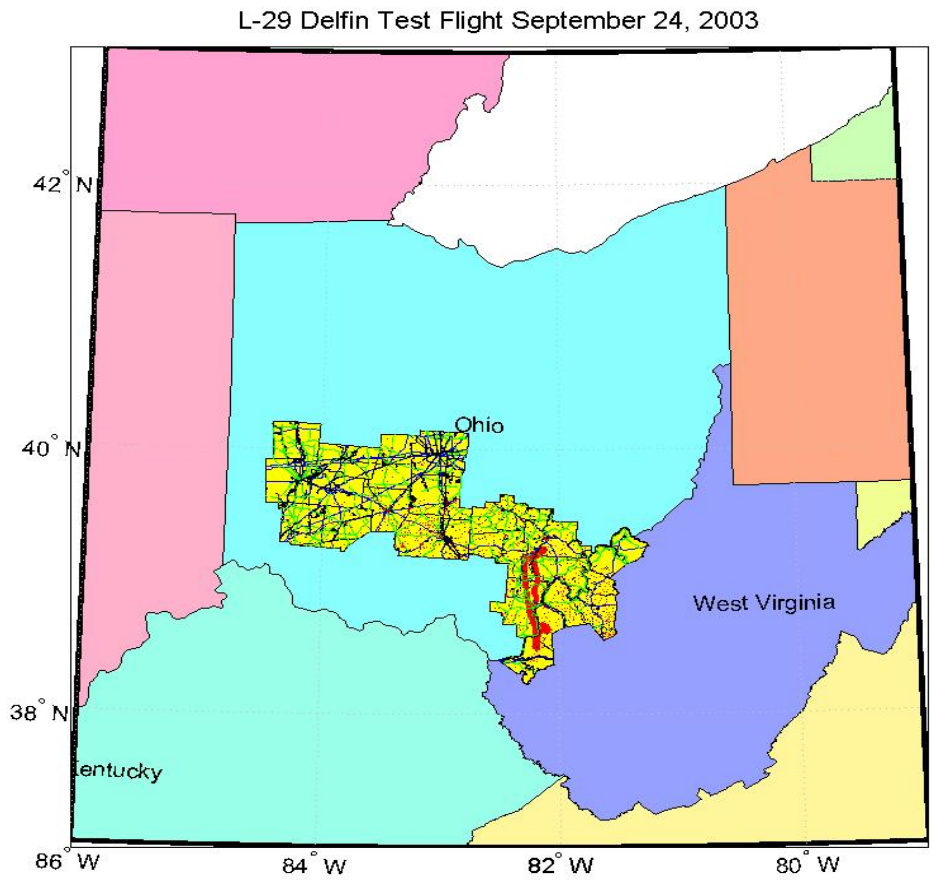
L-29 Delfin Test Flight September 24, 2003
42° N
40° N
38° N
86° W
84° W
82° W
80° W
Ohio
West Virginia
entucky

# Flight Path

L-29 Delfin Test Flight September 24, 2003

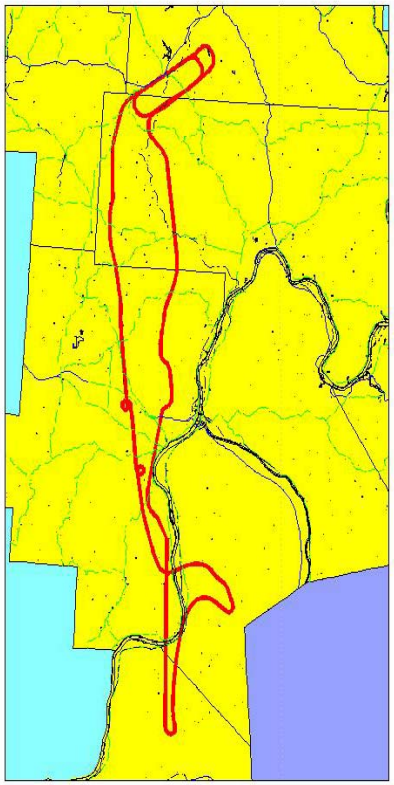

- Maneuvers:
  - Aileron Rolls
  - Modified Hammerhead Stalls
  - Minimum Radius Turns
  - Inverted Flight

# Altitude

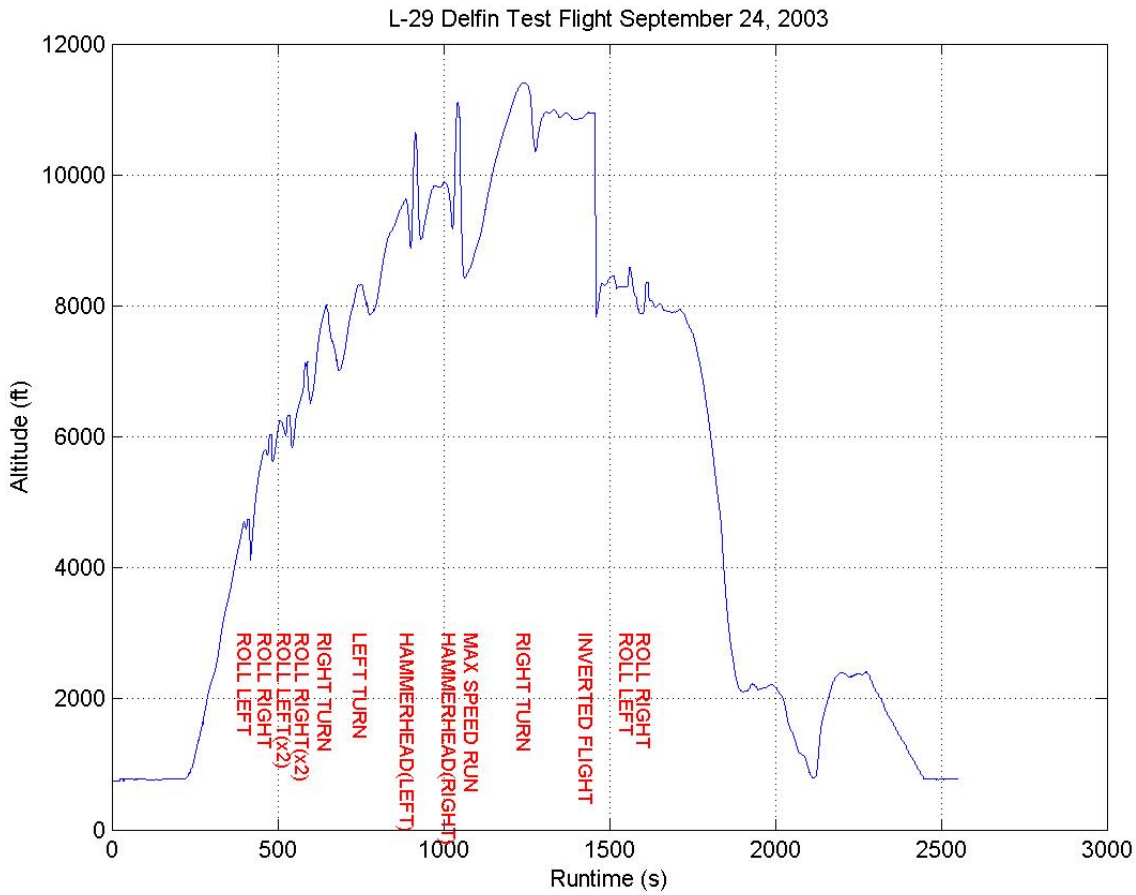
L-29 Delfin Test Flight September 24, 2003
Altitude (ft)
Runtime (s)
0
2000
4000
6000
8000
10000
12000
0
500
1000
1500
2000
2500
3000
ROLL LEFT
ROLL RIGHT
ROLL LEFT(x2)
ROLL RIGHT(x2)
RIGHT TURN
LEFT TURN
HAMMERHEAD(LEFT)
HAMMERHEAD(RIGHT)
MAX SPEED RUN
RIGHT TURN
INVERTED FLIGHT
ROLL LEFT
ROLL RIGHT

# Position Solution Age

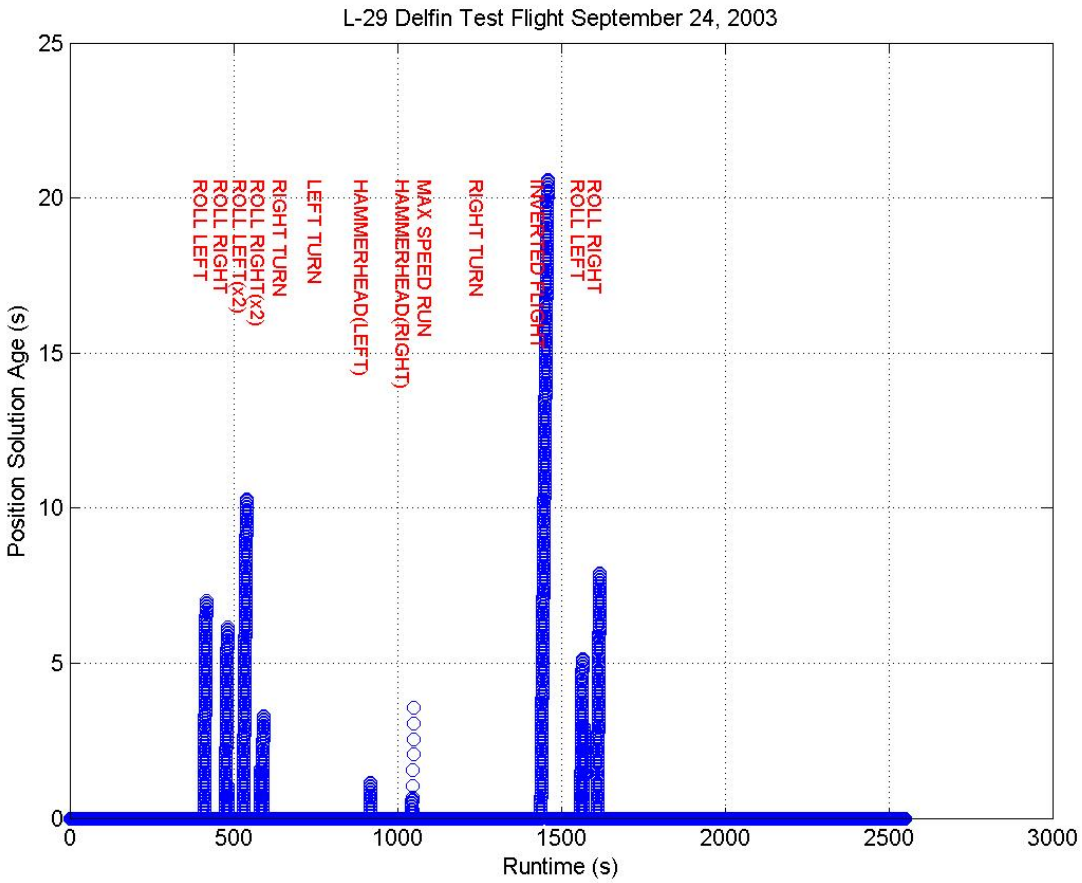


Avionics Engineering Center

# Number of SVs

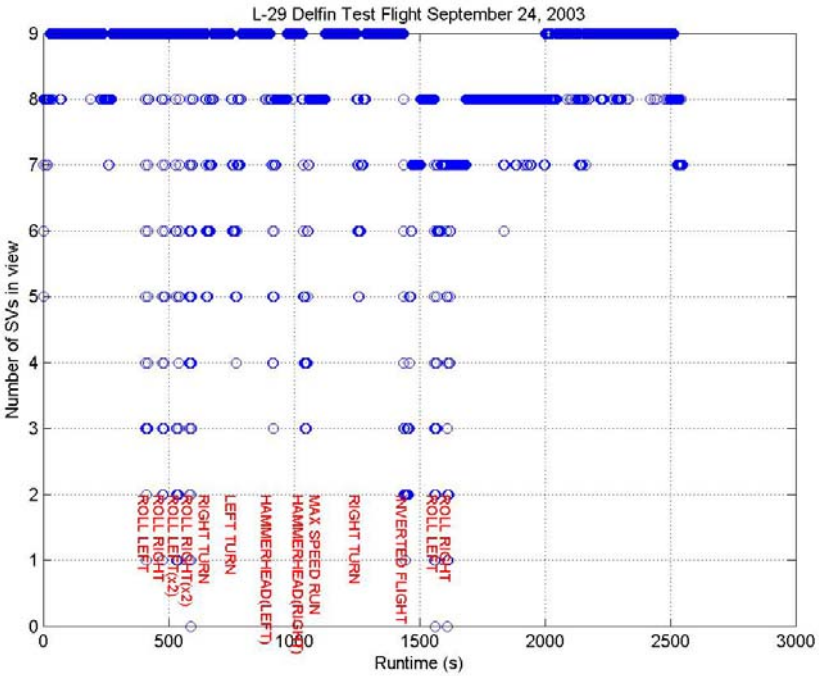


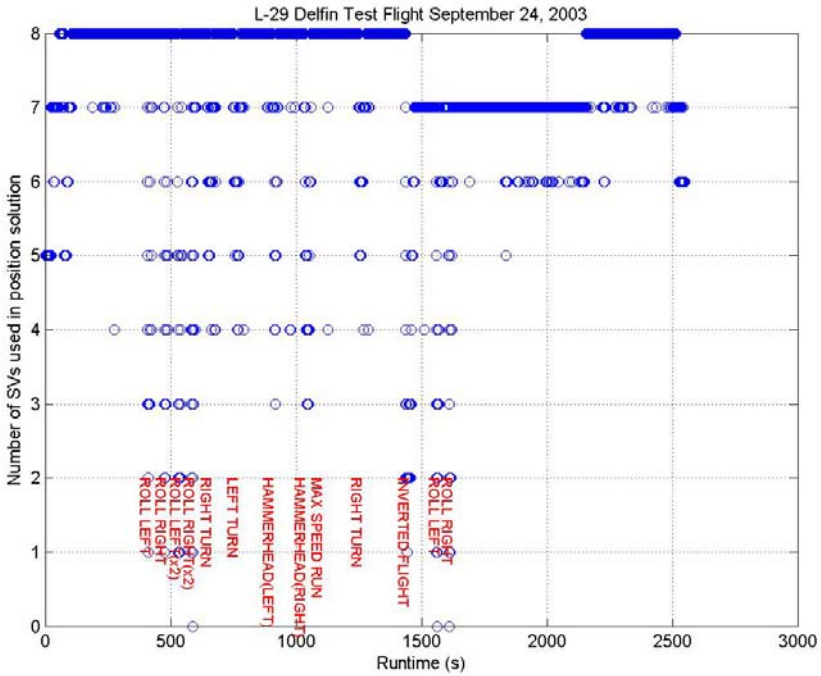

# Groundspeed

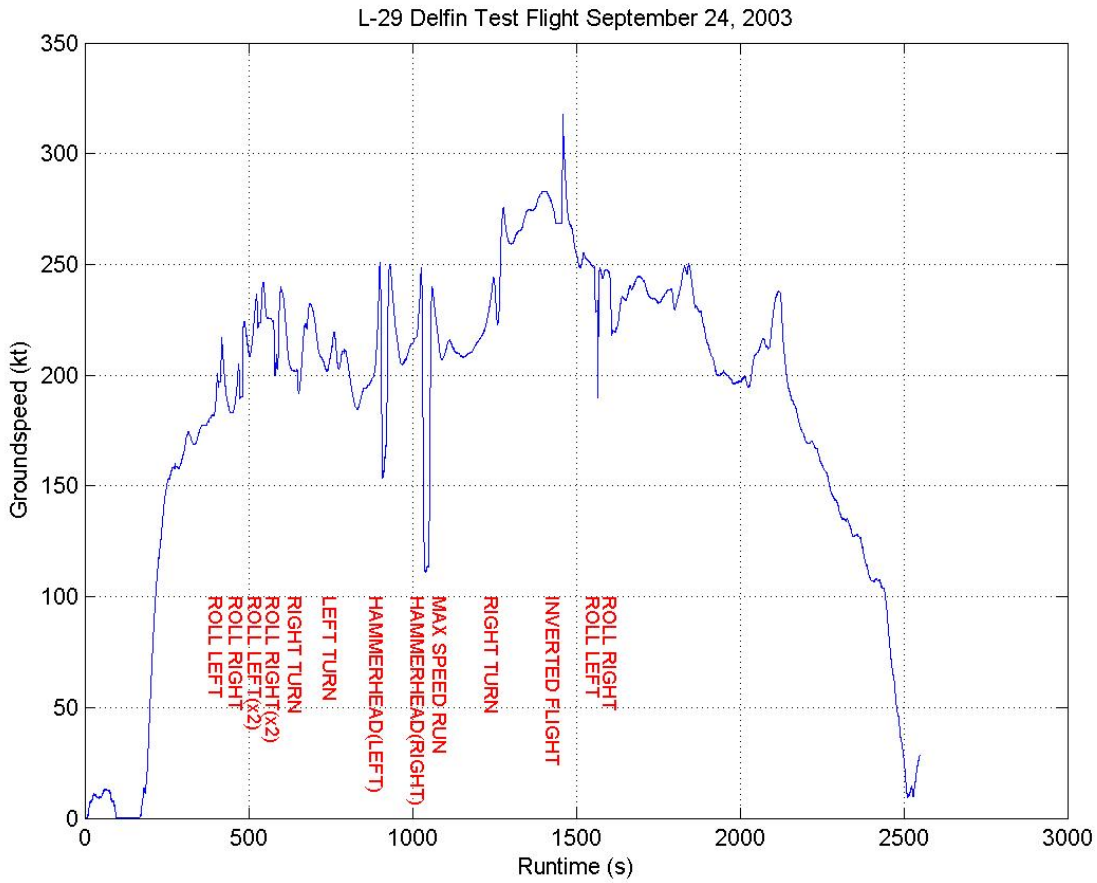

# Vertical Speed

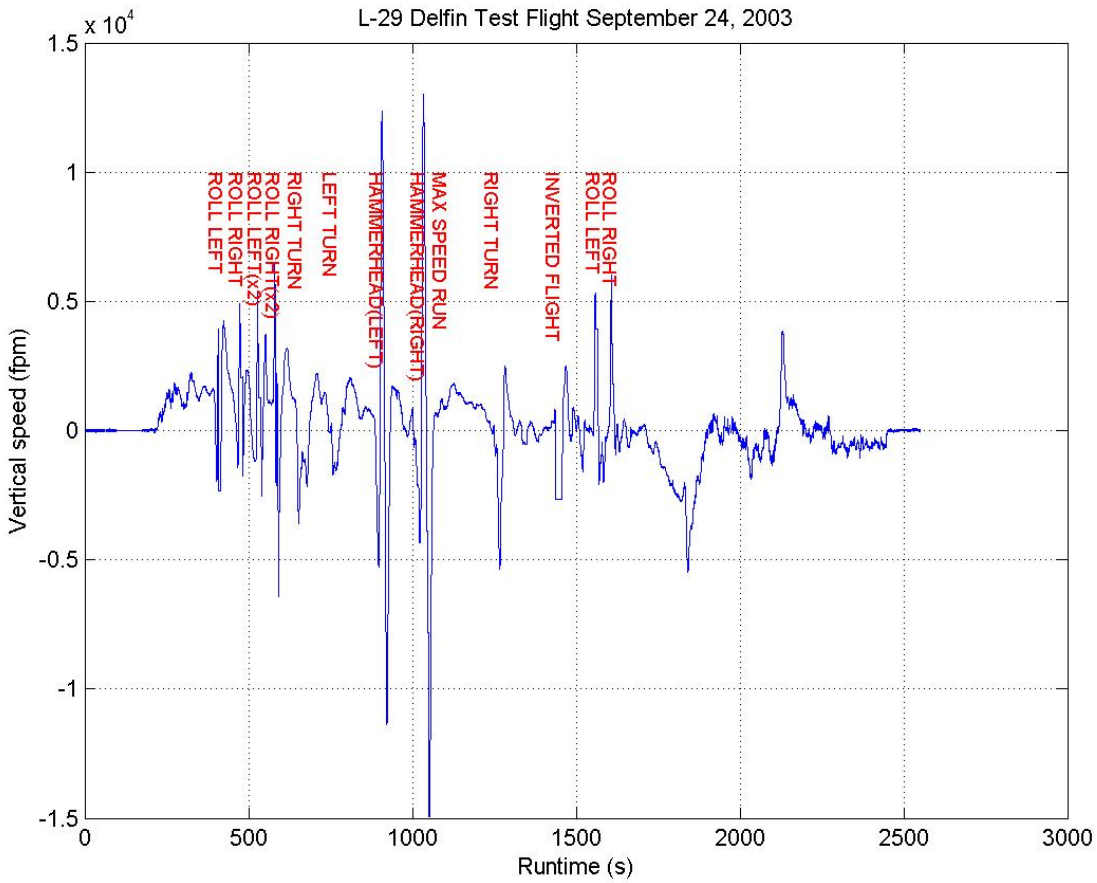

# Project Development

- Goal to have both High Rate Collection of INS and GPS
  - Increase Data Throughput
  - Addition of PC
  - Binary Format
  - Placement of HG-1700 IMU

# Established Equipment

- Additional PC with QNX 4.35, QNX 6.0, and Windows
  - To be Installed in Delfin
  - Three Operating Systems for Easy Data Collection

# Modification of System

- Modify Software to Incorporate Additional Computer
- Tentatively IMU Installed

# Current Schematic

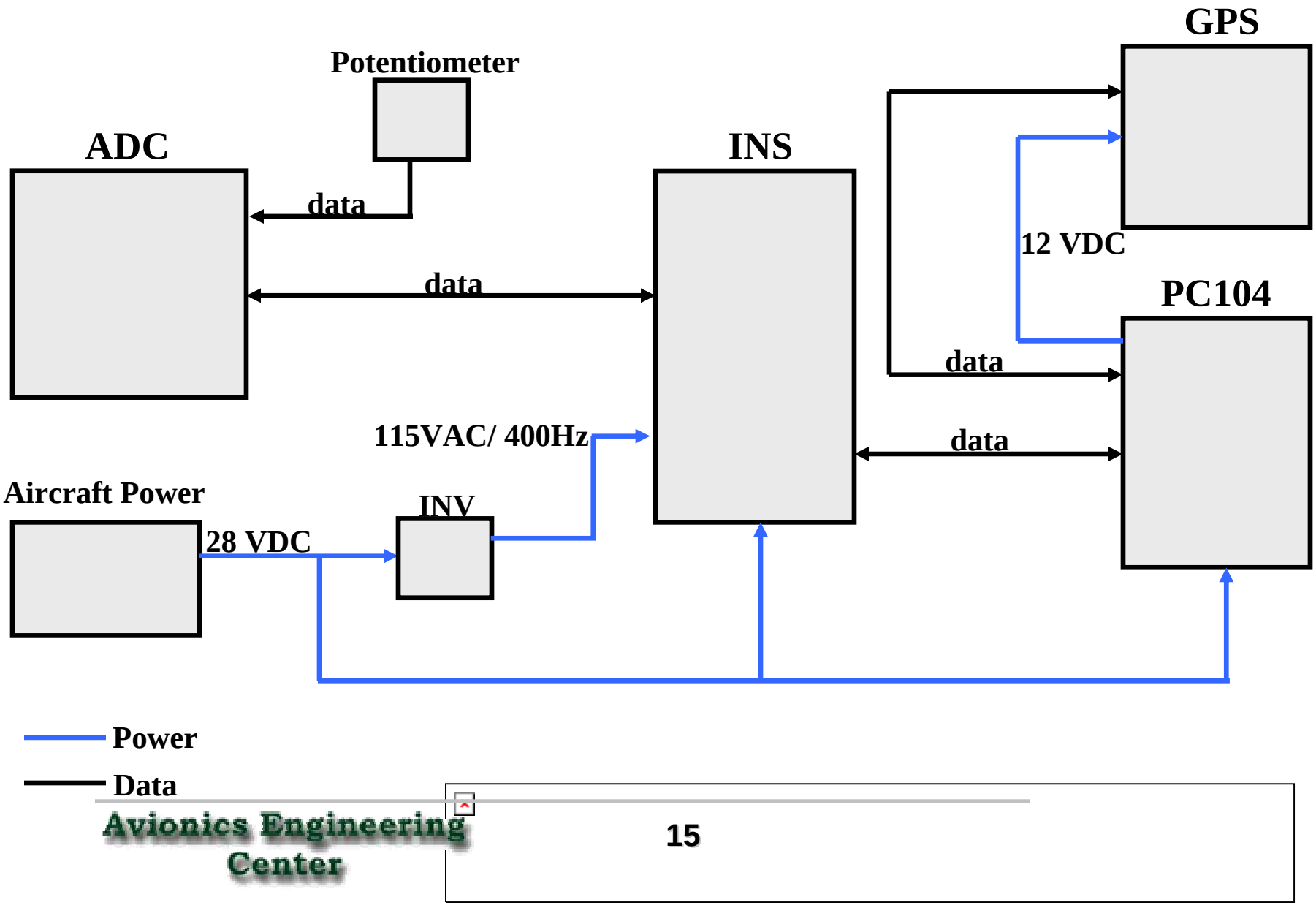

# Projected Set-up

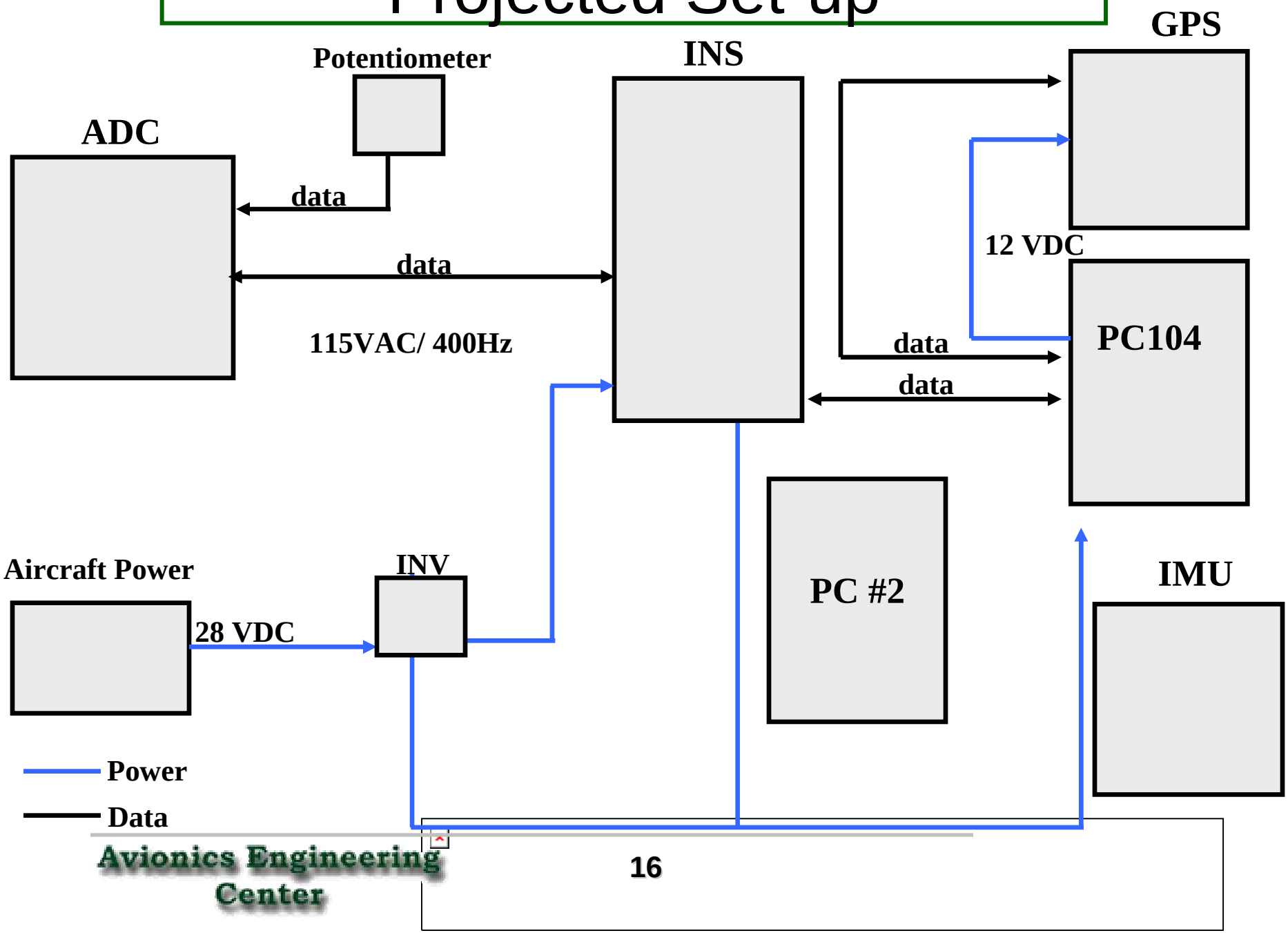


Avionics Engineering Center